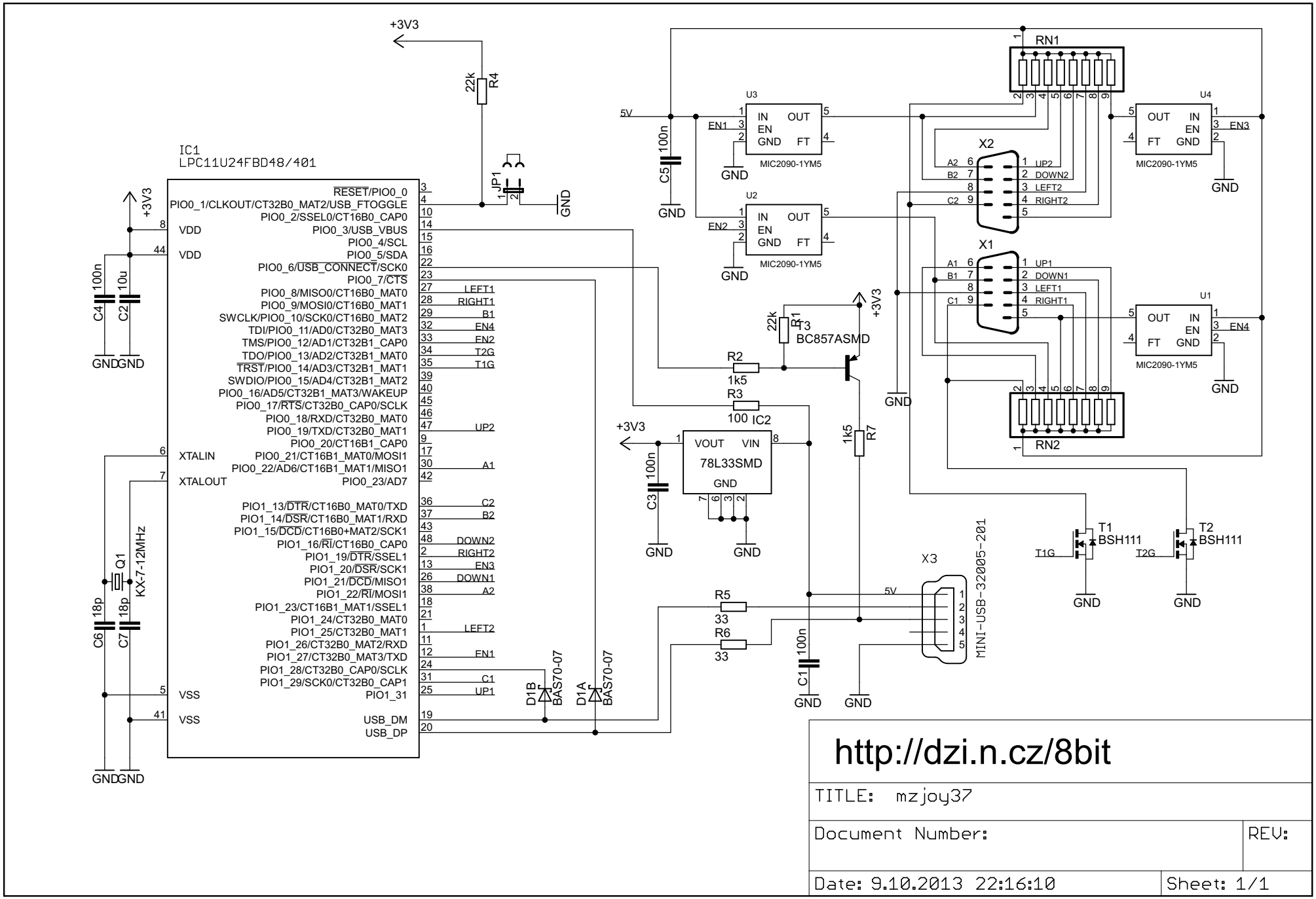
IC1
LPC11U24FBD48/401
RESET/PIO0_0
PIO0_1/CLKOUT/CT32B0_MAT2/USB_FTOGGLE
PIO0_2/SSEL0/CT16B0_CAP0
PIO0_3/USB_VBUS
PIO0_4/SCL
PIO0_5/SDA
PIO0_6/USB_CONNECT/SCK0
PIO0_7/CTS
PIO0_8/MISO0/CT16B0_MAT0
PIO0_9/MOSI0/CT16B0_MAT1
SWCLK/PIO0_10/SCK0/CT16B0_MAT2
TDI/PIO0_11/AD0/CT32B0_MAT3
TMS/PIO0_12/AD1/CT32B1_CAP0
TDO/PIO0_13/AD2/CT32B1_MAT0
TRST/PIO0_14/AD3/CT32B1_MAT1
SWDIO/PIO0_15/AD4/CT32B1_MAT2
PIO0_16/AD5/CT32B1_MAT3/WAKEUP
PIO0_17/RTS/CT32B0_CAP0/SCLK
PIO0_18/RXD/CT32B0_MAT0
PIO0_19/TXD/CT32B0_MAT1
PIO0_20/CT16B1_CAP0
PIO0_21/CT16B1_MAT0/MOSI1
PIO0_22/AD6/CT16B1_MAT1/MISO1
PIO0_23/AD7
PIO1_13/DTR/CT16B0_MAT0/TXD
PIO1_14/DSR/CT16B0_MAT1/RXD
PIO1_15/DCD/CT16B0+MAT2/SCK1
PIO1_16/RI/CT16B0_CAP0
PIO1_19/DTR/SSEL1
PIO1_20/DSR/SCK1
PIO1_21/DCD/MISO1
PIO1_22/RI/MOSI1
PIO1_23/CT16B1_MAT1/SSEL1
PIO1_24/CT32B0_MAT0
PIO1_25/CT32B0_MAT1
PIO1_26/CT32B0_MAT2/RXD
PIO1_27/CT32B0_MAT3/TXD
PIO1_28/CT32B0_CAP0/SCLK
PIO1_29/SCK0/CT32B0_CAP1
PIO1_31
VDD
VDD
XTALIN
XTALOUT
VSS
VSS
USB_DM
USB_DP
LEFT1
RIGHT1
B1
EN4
EN2
T2G
T1G
UP2
A1
C2
B2
DOWN2
RIGHT2
EN3
DOWN1
A2
LEFT2
EN1
C1
UP1
+3V3
22k
R4
JP1
GND
5V
100n
C5
C4
C2
10u
Q1
KX-7-12MHz
C6
C7
18p
D1B
BAS70-07
D1A
BAS70-07
U3
IN
OUT
EN
GND
FT
EN1
MIC2090-1YM5
U2
EN2
U4
EN3
U1
EN4
RN1
RN2
X2
X1
UP2
DOWN2
LEFT2
RIGHT2
UP1
DOWN1
LEFT1
RIGHT1
R1
22k
T3
BC857ASMD
R2
1k5
R3
100
IC2
78L33SMD
VOUT
VIN
C3
R7
1k5
R5
33
R6
33
C1
X3
MINI-USB-32005-201
T1
BSH111
T2
BSH111
T1G
T2G
http://dzi.n.cz/8bit
TITLE: mzjoy37
Document Number:
REV:
Date: 9.10.2013 22:16:10
Sheet: 1/1